Exhibit A to Resolution 2024-119

UTILITY EASEMENT

UTILITY EASEMENT (the "Easement") is made this ___ day of _____, 2024 ("Effective Date"), by CITY OF COMMERCE CITY, a home rule municipality existing pursuant to the laws of the State of Colorado with an address of 7887 E. 60th Avenue, Commerce City, CO 80022 ("City or Grantor"), to UNITED POWER, INC., with a principal place of business at 500 Cooperative Way, Brighton, CO 80603 ("Grantee") and referred to collectively as Parties.

The Parties hereto, in consideration of the mutual covenants contained herein, and for other good and valuable consideration, the adequacy of which is acknowledged by the Parties, the following agreements and understandings are made:

1. GRANT OF EASEMENT. Grantor grants to Grantee, its agents, successors, and assigns, a perpetual and non-exclusive easement over, across, under, on and through the Property, as depicted in more detail on **Exhibit A** attached hereto and incorporated herein ("Easement Property"), for the construction, operation, maintenance, replacement, enlargement, reconstruction, improvement, inspection, repairs and removal of underground utility, electrical and communications facilities and all fixtures and devices appurtenances (the "Facilities"), together with all rights and privileges as are necessary or incidental to the reasonable and proper use of such easement ("Easement"). The Easement shall include a right to use as much of City's adjacent property as reasonably necessary to install, inspect, maintain, repair, and replace the Facilities, provided such use shall not continue for more than 60 consecutive days and provided further that Grantee restores the property used and repairs any damage to the land and any improvements or fixtures there on.

2. OTHER TERMS.

a. Grantor, for itself and for its successors, agents, lessees, and assigns, does hereby covenant and agree that no permanent building or permanent structure shall be placed on the Easement Property.

b. The Grantee shall have and exercise the right of subjacent and lateral support for the full and complete use of the Easement. Grantee assumes the risk that Grantor's use of the Easement Property may damage or otherwise impair Grantee's use or access to Facilities. Any construction upon or adjacent to the Easement Property shall conform to the requirements concerning excavation codified at Title 9, Article 1.5 of the Colorado Revised Statutes.

c. Grantee agrees to hold harmless the Grantor from any and all claims arising from the use of Easement Property by Grantee, its successors, agents, licensees, or guests. Grantee and its successors, assigns, together with licensees, and guests, agree to release the Grantor from any and all claims arising from the construction, installation, use, maintenance, repair replacement, operations or other acts associated with the Facilities on the Easement Property, except for claims arising from negligence on the part of or the willful misconduct of the Grantor, its successors and assigns, and its agents and employees for which the Grantor may be liable under applicable law. Grantee shall be responsible for, and shall fully indemnify the Grantor for any corrective action (including risk assessment, active remediation, passive remediation, voluntary cleanup, investigation, and monitoring) of any environmental contamination resulting from Grantee's use of the Easement Property, including without limitation the emission, discharge, release or threatened release of a Hazardous Material into the air, surface water,

groundwater or land; the manufacturing, processing, use, generation, treatment, storage, disposal, transportation, handling, removal, remediation or investigation of a Hazardous Material; and the protection of human health, safety or the indoor or outdoor environmental, including without limitation the Comprehensive Environmental Response, Compensation and Liability Act, 42 U.S.C. § 9601, *et seq*. ("CERCLA"); the Hazardous Materials Transportation Act, 49 U.S.C. § 1801, *et seq.*; the Resource Conservation and Recovery Act, 42 U.S.C. § 6901, *et seq.* ("RCRA"); the Toxic Substances Control Act, 15 U.S.C. § 2601, *et seq*.; the Clean Water Act, 33 U.S.C. § 1251, *et seq.*; the Clean Air Act, 42 U.S.C. § 7401, *et seq*.; the Occupational Safety and Health Act, 29 U.S.C. § 651, *et seq*.; all applicable environmental statutes of the State of Colorado; and all other federal, state or local statutes, laws, ordinances, resolutions, codes, rules, regulations, orders or decrees regulating, relating to, or imposing liability or standards of conduct concerning any hazardous, toxic or dangerous waste, substance or material, as now or at any time hereafter in effect.

3. RESERVATION OF USE AND OCCUPANCY.

a. Grantor retains the right to the use and occupancy of the Easement Property, even if said use is inconsistent with Grantee's ability to access its Facilities. Grantor retains the rights to occupy the surface of the Easement Property for the purpose of constructing, maintaining, or accessing the detention pond, or any improvements upon Grantor's adjacent property, to the extent that Grantor does not disturb Grantee's Facilities.

b. Insofar as such use and occupancy is consistent with the terms of this Easement and does not impair the Grantee's use or the purpose of the Easement. Grantee's rights to use the Easement Property as provided by this Agreement shall be subordinate to Grantor's rights provided herein.

c. Grantee shall provide notice to Grantor concerning any construction, or maintenance to Grantee's Facilities.

4. ENFORCEABILITY; NO WAIVER. If a court of competent jurisdiction holds any provision of this Easement invalid or unenforceable, such holding shall not invalidate or render unenforceable any other provision of this Easement. Neither Grantor's nor the Grantee's failure to insist, in any one or more instances, upon a strict performance of any of the obligations, covenants, or agreements herein contained, or the Grantor's or the Grantee's failure, in any one or more instances, to exercise any option, privilege, or right, shall in no way be construed to constitute a waiver, relinquishment, or release of such obligations, covenants, or agreements, nor forbearance by Grantor or the Grantee of any default under this Easement shall in any manner be construed as a waiver of such default.

5. ASSIGNMENT. Grantee may only assign its rights under this Easement upon consent from Grantor.

6. NO WAIVER OF GOVERNMENTAL IMMUNITY. No term or condition of this Easement shall be construed or interpreted as a waiver, express or implied, of any of the immunities, rights, benefits, protections or other provisions of the Colorado Governmental Immunity Act, C.R.S. §§ 24-10-101, *et seq*.

7. EASEMENT TO RUN WITH LAND; RECORDATION. The Easement shall run with the land and perpetually encumber the above-described Property.

8. WARRANTY OF TITLE. Grantor has not and does not make any express, implied, or statutory warranties or representations of any kind to Grantee concerning Grantor's Title to Easement Property.

9. REVOCATION. Grantor reserves the right to relocate this Easement in the event that Grantee's Facilities need to be relocated to allow for Grantor's use of adjacent property. In the event that Grantor exercises this right of revocation, Grantor will provide an alternative location for Grantee's Facilities.

IN WITNESS WHEREOF, the undersigned has set his hands effective the day and year first above written.

GRANTEE

UNITED POWER, INC.

By: _____
Bryant Robbins
Chief Operating Officer

ATTEST (if necessary)

By: _____
Name
Title

STATE OF COLORADO)
) ss.
COUNTY OF ADAMS)

Signed before me on this ___ day of _____, 2024, by Bryant Robbins, as Chief Operating Officer, of United Power Inc.

My Commission expires: _____

(SEAL)

_____
Notary Public

Exhibit A to Resolution 2024-119

THE CITY OF COMMERCE CITY, CO

_____
Steven J. Douglas, Mayor

ATTEST:

_____
Dylan A. Gibson, City Clerk

Approved as to form:

_____
Genevieve "Jean" Gill, Senior Assistant City Attorney

Exhibit A to Resolution 2024-119
Legal Description

DESCRIPTION

BEING THAT PARCEL OF LAND AS DESCRIBED IN A SPECIAL WARRANTY DEED TO CITY OF COMMERCE CITY, FILED FOR RECORD IN THE OFFICE OF THE ADAMS COUNTY CLERK AND RECORDER AT RECEPTION NO. 201600006792. SAID PARCEL OF LAND IS LOCATED IN THE SOUTHWEST ONE-QUARTER OF SECTION 21, TOWN 2 SOUTH (T.2S.), RANGE 66 WEST (R.66W.) OF THE SIXTH PRINCIPAL MERIDIAN (6TH P.M.), CITY OF COMMERCE CITY, COUNTY OF ADAMS, STATE OF COLORADO, DESCRIBED AS FOLLOWS:

EASEMENT CENTERLINE

A 10.00 FOOT WIDE STRIP, BEING 5.00 FEET, AS MEASURED PERPENDICULAR, LEFT AND RIGHT OF THE FOLLOWING DESCRIBED CENTERLINE;

COMMENCING AT THE SOUTHWEST CORNER OF SAID SECTION 21, AS MONUMENTED BY A FOUND 3.25 INCH ALUMINUM CAP MARKED “PLS 7276 1988”; THENCE NORTH 87°51'25” EAST A DISTANCE OF 1,163.48 FEET, MORE OR LESS, TO THE **POINT OF BEGINNING**;

THENCE NORTH 00°40'00" WEST, OVER AND ACROSS SAID PARCEL OF LAND, A DISTANCE OF 5.00 FEET; THENCE SOUTH 89°20’04” WEST, A DISTANCE OF 1,092.47 FEET; THENCE NORTH 53°10’38” WEST, A DISTANCE OF 12.77 FEET; THENCE NORTH 20°13’01” WEST, A DISTANCE OF 10.87 FEET; THENCE NORTH 04°06’00” WEST, A DISTANCE OF 147.34’; THENCE NORTH 00°12’04” EAST, A DISTANCE OF 2,217.77 FEET; THENCE NORTH 12°43’08” WEST, A DISTANCE OF 44.00 FEET; THENCE NORTH 00°09’30” EAST, A DISTANCE OF 206.36 FEET; THENCE NORTH 49°38’25” WEST, A DISTANCE OF 45.58 FEET TO THE **POINT OF TERMINUS,** FROM WHICH THE WEST ONE-QUARTER CORNER OF SAID SECTION 21, AS MONUMENTED BY A FOUND 3.25 INCH ALUMINUM CAP MARKED “PLS 34988 2012”, BEARS SOUTH 00°11'30" EAST, A DISTANCE OF 31.36 FEET.

THE TOTAL LENGTH OF THE ABOVE-DESCRIBED EASEMENT CENTERLINE IS 3,782.16 FEET, CONTAINING 0.868 ACRES (37,821 SQUARE FEET) OF LAND, MORE OR LESS.

THE SIDELINES OF THE HEREIN DESCRIBED EASEMENT ARE SHORTENED OR LENGTHENED TO MEET AT ANGLE POINTS AND TO TERMINATE ON THE SOUTH AND WEST LINES OF SAID PARCEL OF LAND. SAID STRIP BEING BOUND WITHIN THE LANDS OWNED BY THE PARTIES NAMED HEREON OR THEIR SUCCESSORS AND ASSIGNS.

POCKET EASEMENT “A”

COMMENCING AT THE SOUTHWEST CORNER OF SAID SECTION 21, AS MONUMENTED BY A FOUND 3.25 INCH ALUMINUM CAP MARKED “PLS 7276 1988”; THENCE NORTH 11°09'24” EAST A DISTANCE OF 157.91 FEET, MORE OR LESS, TO THE **POINT OF BEGINNING “A”**;

THENCE, OVER AND ACROSS SAID PARCEL OF LAND THE FOLLOWING FOUR (4) COURSES AND DISTANCES;

1. NORTH 00°12'17" EAST, A DISTANCE OF 10.00 FEET;
2. SOUTH 89°47'43” EAST, A DISTANCE OF 12.66 FEET, TO A POINT ON THE WEST LINE OF THE PROPOSED TEN (10) FOOT WIDE EASEMENT;
3. SOUTH 04°06'00" EAST, CONTINUING ALONG THE SAID WEST LINE OF THE PROPOSED TEN (10) WIDE EASEMENT, A DISTANCE OF 10.03 FEET;
4. NORTH 89°47'43” WEST, A DISTANCE OF 13.41 FEET TO THE **POINT OF BEGINNING “A”**.

THE TOTAL AREA OF THE ABOVE-DESCRIBED POCKET EASEMENT IS 0.003 ACRES (130 SQUARE FEET) OF LAND, MORE OR LESS.

POCKET EASEMENT “B”

COMMENCING AT THE WEST QUARTER CORNER OF SAID SECTION 21, AS MONUMENTED BY A FOUND 3.25 INCH ALUMINUM CAP MARKED “PLS 34988 2012”; THENCE SOUTH 00°12'17” WEST A DISTANCE OF 5.06 FEET, MORE OR LESS, TO THE **POINT OF BEGINNING “B”**;

THENCE, OVER AND ACROSS SAID PARCEL OF LAND THE FOLLOWING FIVE (5) COURSES AND DISTANCES;

1. NORTH 00°12'17" EAST, A DISTANCE OF 5.04 FEET;
2. NORTH 00°11'30" EAST, A DISTANCE OF 24.82 FEET, TO A POINT ON THE SOUTH LINE OF THE PROPOSED TEN (10) FOOT WIDE EASEMENT;
3. SOUTH 49°38'25" EAST, CONTINUING ALONG THE SAID SOUTH LINE OF THE PROPOSED TEN (10) WIDE EASEMENT, A DISTANCE OF 39.04 FEET;
4. SOUTH 00°09'30” EAST, CONTINUING ALONG THE WEST LINE OF THE PROPOSED TEN (10) WIDE EASEMENT, A DISTANCE OF 4.66 FEET,
5. NORTH 89°50'30” WEST, A DISTANCE OF 29.84 FEET TO THE **POINT OF BEGINNING “B”**.

THE TOTAL AREA OF THE ABOVE-DESCRIBED POCKET EASEMENT “B” IS 0.012 ACRES (515 SQUARE FEET) OF LAND, MORE OR LESS.

REVISIONS

NO.	DATE	BY	DESCRIPTION
A	08/15/24	CAD	ADDED POCKET EASEMENTS

PROJ. NO. 216040
PREPARED BY: CHRISTOPHER A. DEPAULIS, PLS
DATE PREPARED: 08/03/2023
FOR AND ON BEHALF OF ACKLAM, INC.
133 S. 27th AVENUE BRIGHTON, CO 80601
303.659.6267
236016_202209044_96TH TO BUCKLEY RD_SOUTH_REV_A
PRINTED: 8/16/2024 11:22:00 AM Julanne Hunter

Exhibit A to Resolution 2024-119
Legal Description

NOTES:

1. SEE THE ATTACHED ILLUSTRATION BY WHICH THIS REFERENCE IS MADE PART HEREOF.
2. THIS DESCRIPTION WAS PREPARED WITHOUT THE BENEFIT OF A TITLE COMMITMENT, THEREFORE ACKLAM, INC. HAS NOT RESEARCHED OR SHOWN ANY OTHER EASEMENTS, RIGHTS OF WAY, VARIANCES, AND OR AGREEMENTS OF RECORD EXCEPT AS SHOWN HEREON.
3. BEARINGS SHOWN HEREON ARE BASED ON GPS OBSERVATIONS VIA "VRS NOW" POSITIONING SYSTEM AND/OR THE ONLINE POSITIONING USER SERVICE OFFERED BY THE N.G.S. AND PROJECTED TO "COLORADO COORDINATE SYSTEM OF 1983 NORTH ZONE" (C.R.S. 38-52-105 & 106).
4. DISTANCES SHOWN HEREON ARE IN US SURVEY FEET GRID. THE COMBINED FACTOR USED TO OBTAIN THE GRID DISTANCES IS 0.999730493.
5. THE BASIS OF BEARINGS FOR THIS SURVEY IS THE WEST LINE OF THE SOUTHWEST ONE-QUARTER OF SECTION 21, TOWNSHIP 2 SOUTH, RANGE 66 WEST OF THE 6TH P.M. SAID LINE BEING MONUMENTED ON THE SOUTH BY THE SOUTHWEST CORNER OF SAID SECTION 21, BEING A FOUND 3.25 INCH ALUMINUM CAP MARKED “PLS 7276 1988” AND ON THE NORTH BY THE WEST ONE-QUARTER CORNER OF SAID SECTION 21, BEING A FOUND 3.25 INCH ALUMINUM CAP MARKED “PLS 34988 2012” AND BEARS NORTH 00°12’17” EAST.

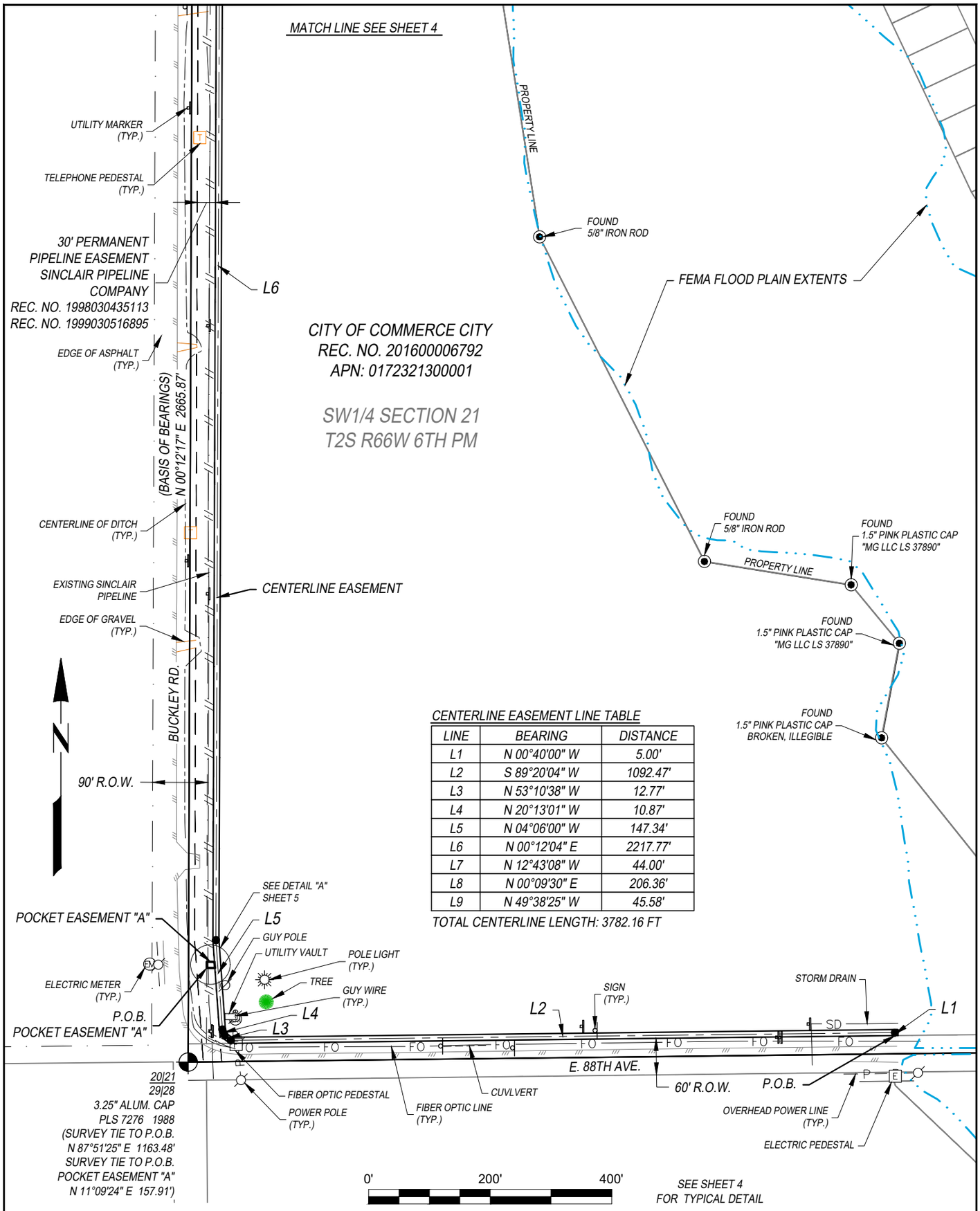

CENTERLINE EASEMENT LINE TABLE

LINE	BEARING	DISTANCE
L1	N 00°40'00" W	5.00'
L2	S 89°20'04" W	1092.47'
L3	N 53°10'38" W	12.77'
L4	N 20°13'01" W	10.87'
L5	N 04°06'00" W	147.34'
L6	N 00°12'04" E	2217.77'
L7	N 12°43'08" W	44.00'
L8	N 00°09'30" E	206.36'
L9	N 49°38'25" W	45.58'

TOTAL CENTERLINE LENGTH: 3782.16 FT

NOTES

1.) LOCATIONS OF UTILITIES AND FOREIGN PIPELINES WERE DETERMINED FROM VISIBLE SURFACE EVIDENCE. THESE LOCATIONS IF SHOWN MAY NOT BE ACCURATE OR COMPLETE. OTHER UTILITIES MAY EXIST AND ARE TO BE FIELD LOCATED BY OTHERS PRIOR TO EXCAVATION.
2.) THIS EXHIBIT WAS PREPARED WITHOUT THE BENEFIT OF A TITLE COMMITMENT, THEREFORE ACKLAM, INC. HAS NOT RESEARCHED OR SHOWN ANY OTHER EASEMENTS, RIGHTS OF WAY, VARIANCES AND OR AGREEMENTS OF RECORD EXCEPT AS SHOWN HEREON.
3.) THIS EXHIBIT IS NOT A LAND SURVEY PLAT OR IMPROVEMENT SURVEY PLAT. EXCEPT FOR THE EASEMENT/RIGHT OF WAY DEPICTED HEREON IT IS NOT TO BE RELIED UPON FOR THE DIVISION OF LAND, ESTABLISHMENT OF ANY LAND BOUNDARY, FENCE, BUILDING, OR OTHER FUTURE IMPROVEMENT LINES.
4.) BEARINGS SHOWN HEREON ARE BASED ON GPS OBSERVATIONS VIA "VRS NOW" POSITIONING SYSTEM AND/OR THE ONLINE POSITIONING USER SERVICE OFFERED BY THE N.G.S. AND PROJECTED TO "COLORADO COORDINATE SYSTEM OF 1983 NORTH ZONE" (C.R.S. 38-52-105 & 106). DISTANCES SHOWN HEREON ARE IN US SURVEY FEET GRID. THE COMBINED FACTOR USED TO OBTAIN THE GRID DISTANCES IS 0.999730493.
5.) NOTICE: ACCORDING TO COLORADO LAW YOU MUST COMMENCE ANY LEGAL ACTION BASED UPON ANY DEFECT IN THIS SURVEY WITHIN THREE YEARS AFTER YOU FIRST DISCOVER SUCH DEFECT. IN NO EVENT MAY ANY ACTION BASED UPON ANY DEFECT IN THIS SURVEY BE COMMENCED MORE THAN TEN YEARS FROM THE DATE OF THE CERTIFICATION SHOWN HEREON.
6.) THIS EXHIBIT WAS PREPARED BY CHRISTOPHER ARTHUR DEPAULIS, PLS 38105, FOR AND ON BEHALF OF ACKLAM, INC. 133 S. 27TH AVENUE, BRIGHTON, CO 80601.
7.) SEE THE ATTACHED DESCRIPTION BY WHICH THIS REFERENCE IS MADE HEREOF.

Acklam, Inc.
133 S. 27th Avenue
Brighton, CO 80601
11713 Shoreview Overlook
Austin, TX 78732
Texas Firm#10194171

UNITED POWER
EXHIBIT "A" ILLUSTRATION
W1/2 SECTION 21, T2S, R66W 6TH PM,
CITY OF COMMERCE CITY, ADAMS COUNTY, COLORADO

SCALE: 1"=200'	
DATE: 07/17/23	JAH
JOB NO.: 236016	
JOB NAME: 96TH AVE BUCKLEY RD TO 88TH	
SHEET 3 OF 5	
REV: A	JAH 08/15/24
WORK ORDER NO.: 202209044	

FILE: Z:\ACKLAM JOBS\2023\UNITED POWER\236016_202209044_96TH AVE BUCKLEY RD TO 88TH\DRAWINGS\LANDOWNER_EXHIBITS\WO_202209044_CITY OF COMMERCE CITY_REV_A.DWG PLOTTED: Aug 16, 2024 11:22am

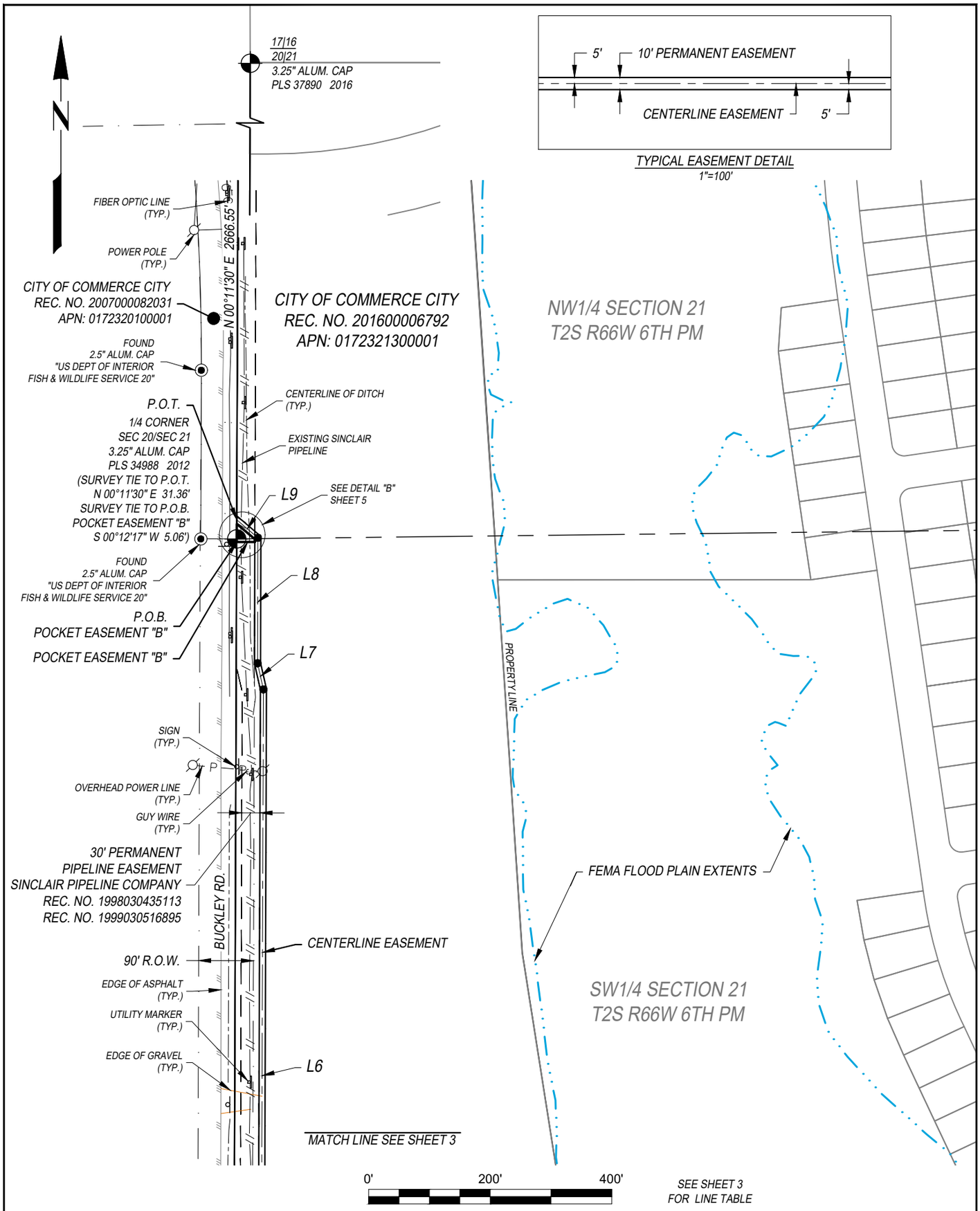

NOTES

1.) LOCATIONS OF UTILITIES AND FOREIGN PIPELINES WERE DETERMINED FROM VISIBLE SURFACE EVIDENCE. THESE LOCATIONS IF SHOWN MAY NOT BE ACCURATE OR COMPLETE. OTHER UTILITIES MAY EXIST AND ARE TO BE FIELD LOCATED BY OTHERS PRIOR TO EXCAVATION.
2.) THIS EXHIBIT WAS PREPARED WITHOUT THE BENEFIT OF A TITLE COMMITMENT, THEREFORE ACKLAM, INC. HAS NOT RESEARCHED OR SHOWN ANY OTHER EASEMENTS, RIGHTS OF WAY, VARIANCES AND OR AGREEMENTS OF RECORD EXCEPT AS SHOWN HEREON.
3.) THIS EXHIBIT IS NOT A LAND SURVEY PLAT OR IMPROVEMENT SURVEY PLAT. EXCEPT FOR THE EASEMENT/RIGHT OF WAY DEPICTED HEREON IT IS NOT TO BE RELIED UPON FOR THE DIVISION OF LAND, ESTABLISHMENT OF ANY LAND BOUNDARY, FENCE, BUILDING, OR OTHER FUTURE IMPROVEMENT LINES.
4.) BEARINGS SHOWN HEREON ARE BASED ON GPS OBSERVATIONS VIA "VRS NOW" POSITIONING SYSTEM AND/OR THE ONLINE POSITIONING USER SERVICE OFFERED BY THE N.G.S. AND PROJECTED TO "COLORADO COORDINATE SYSTEM OF 1983 NORTH ZONE" (C.R.S. 38-52-105 & 106). DISTANCES SHOWN HEREON ARE IN US SURVEY FEET GRID. THE COMBINED FACTOR USED TO OBTAIN THE GRID DISTANCES IS 0.999730493.
5.) NOTICE: ACCORDING TO COLORADO LAW YOU MUST COMMENCE ANY LEGAL ACTION BASED UPON ANY DEFECT IN THIS SURVEY WITHIN THREE YEARS AFTER YOU FIRST DISCOVER SUCH DEFECT. IN NO EVENT MAY ANY ACTION BASED UPON ANY DEFECT IN THIS SURVEY BE COMMENCED MORE THAN TEN YEARS FROM THE DATE OF THE CERTIFICATION SHOWN HEREON.
6.) THIS EXHIBIT WAS PREPARED BY CHRISTOPHER ARTHUR DEPAULIS, PLS 38105, FOR AND ON BEHALF OF ACKLAM, INC. 133 S. 27TH AVENUE, BRIGHTON, CO 80601.
7.) SEE THE ATTACHED DESCRIPTION BY WHICH THIS REFERENCE IS MADE HEREOF.

Acklam, Inc.
133 S. 27th Avenue
Brighton, CO 80601
11713 Shoreview Overlook
Austin, TX 78732
Texas Firm#10194171

UNITED POWER
EXHIBIT "A" ILLUSTRATION
W1/2 SECTION 21, T2S, R66W 6TH PM,
CITY OF COMMERCE CITY, ADAMS COUNTY, COLORADO

SCALE: 1"=200'	
DATE: 07/17/23	JAH
JOB NO.: 236016	
JOB NAME: 96TH AVE BUCKLEY RD TO 88TH	
SHEET 4 OF 5	
REV: A	JAH 08/15/24
WORK ORDER NO.: 202209044	

FILE: Z:\ACKLAM JOBS\2023\UNITED POWER\236016_202209044_96TH AVE BUCKLEY RD TO 88TH\DRAWINGS\LANDOWNER_EXHIBITS\WO_202209044_CITY OF COMMERCE CITY_REV_A.DWG PLOTTED: Aug 16, 2024 11:22am

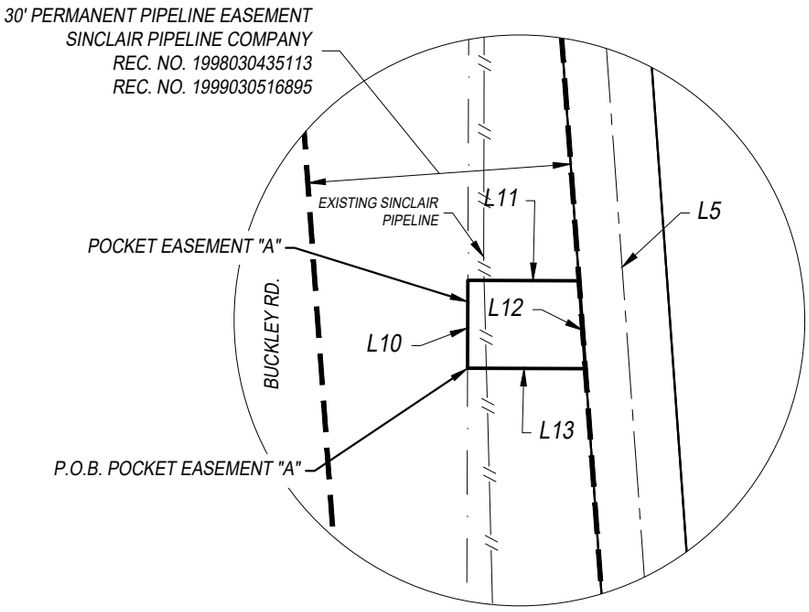

DETAIL "A"
1"=20'

POCKET EASEMENT "A" LINE TABLE

LINE	BEARING	DISTANCE
L10	N 00°12'17" E	10.00'
L11	S 89°47'43" E	12.66'
L12	S 04°06'00" E	10.03'
L13	N 89°47'43" W	13.41'

TOTAL AREA: 0.003 ACRES (130 SQ. FT.)

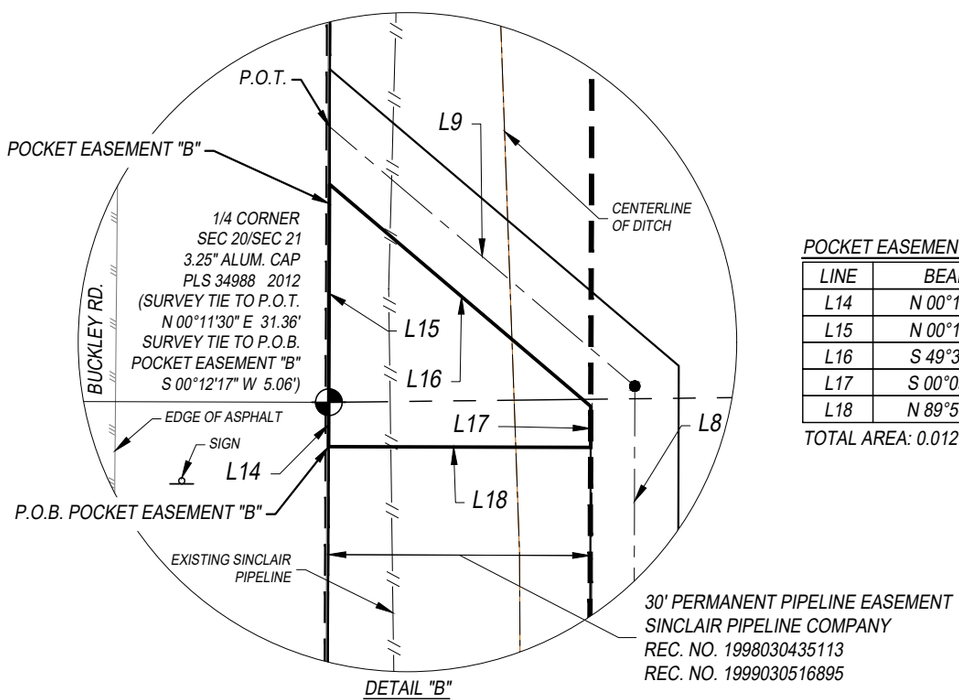

DETAIL "B"
1"=20'

POCKET EASEMENT "B" LINE TABLE

LINE	BEARING	DISTANCE
L14	N 00°12'17" E	5.04'
L15	N 00°11'30" E	24.82'
L16	S 49°38'25" E	39.04'
L17	S 00°09'30" W	4.66'
L18	N 89°50'30" W	29.84'

TOTAL AREA: 0.012 ACRES (515 SQ. FT.)

SEE SHEET 4
FOR TYPICAL DETAIL

NOTES

1.) LOCATIONS OF UTILITIES AND FOREIGN PIPELINES WERE DETERMINED FROM VISIBLE SURFACE EVIDENCE. THESE LOCATIONS IF SHOWN MAY NOT BE ACCURATE OR COMPLETE. OTHER UTILITIES MAY EXIST AND ARE TO BE FIELD LOCATED BY OTHERS PRIOR TO EXCAVATION.
2.) THIS EXHIBIT WAS PREPARED WITHOUT THE BENEFIT OF A TITLE COMMITMENT, THEREFORE ACKLAM, INC. HAS NOT RESEARCHED OR SHOWN ANY OTHER EASEMENTS, RIGHTS OF WAY, VARIANCES AND OR AGREEMENTS OF RECORD EXCEPT AS SHOWN HEREON.
3.) THIS EXHIBIT IS NOT A LAND SURVEY PLAT OR IMPROVEMENT SURVEY PLAT. EXCEPT FOR THE EASEMENT/RIGHT OF WAY DEPICTED HEREON IT IS NOT TO BE RELIED UPON FOR THE DIVISION OF LAND, ESTABLISHMENT OF ANY LAND BOUNDARY, FENCE, BUILDING, OR OTHER FUTURE IMPROVEMENT LINES.
4.) BEARINGS SHOWN HEREON ARE BASED ON GPS OBSERVATIONS VIA "VRS NOW" POSITIONING SYSTEM AND/OR THE ONLINE POSITIONING USER SERVICE OFFERED BY THE N.G.S. AND PROJECTED TO "COLORADO COORDINATE SYSTEM OF 1983 NORTH ZONE" (C.R.S. 38-52-105 & 106). DISTANCES SHOWN HEREON ARE IN US SURVEY FEET GRID. THE COMBINED FACTOR USED TO OBTAIN THE GRID DISTANCES IS 0.999730493.
5.) NOTICE: ACCORDING TO COLORADO LAW YOU MUST COMMENCE ANY LEGAL ACTION BASED UPON ANY DEFECT IN THIS SURVEY WITHIN THREE YEARS AFTER YOU FIRST DISCOVER SUCH DEFECT. IN NO EVENT MAY ANY ACTION BASED UPON ANY DEFECT IN THIS SURVEY BE COMMENCED MORE THAN TEN YEARS FROM THE DATE OF THE CERTIFICATION SHOWN HEREON.
6.) THIS EXHIBIT WAS PREPARED BY CHRISTOPHER ARTHUR DEPAULIS, PLS 38105, FOR AND ON BEHALF OF ACKLAM, INC. 133 S. 27TH AVENUE, BRIGHTON, CO 80601.
7.) SEE THE ATTACHED DESCRIPTION BY WHICH THIS REFERENCE IS MADE HEREOF.

Acklam, Inc.
133 S. 27th Avenue
Brighton, CO 80601
11713 Shoreview Overlook
Austin, TX 78732
Texas Firm#10194171

UNITED POWER
EXHIBIT "A" ILLUSTRATION
W1/2 SECTION 21, T2S, R66W 6TH PM,
CITY OF COMMERCE CITY, ADAMS COUNTY, COLORADO

SCALE: AS NOTED	
DATE: 07/17/23	JAH
JOB NO.: 236016	
JOB NAME: 96TH AVE BUCKLEY RD TO 88TH	
SHEET 5 OF 5	
REV: A	JAH 08/15/24
WORK ORDER NO.: 202209044	